USED ON
–

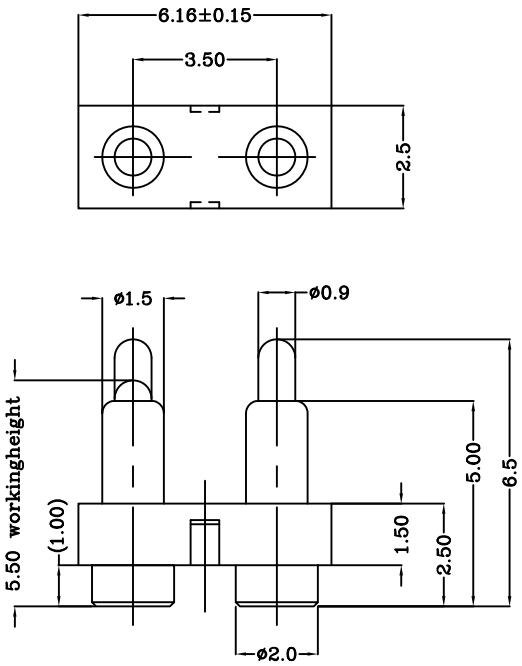

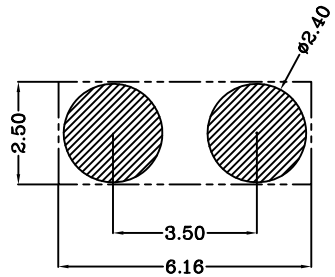

Recommended PCB Layout

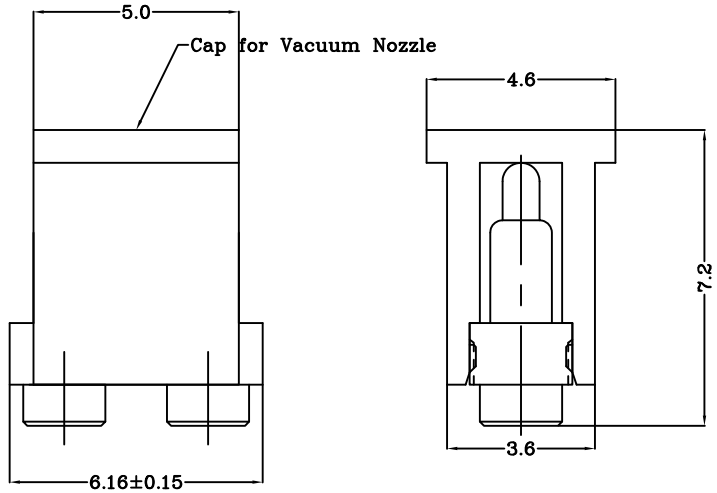

TOP-LINK

Notes:
1 Material, Housing: PA 4.6 (30% Glass Filled)
Color Black.
Contact: Brass
2 Mechanical demands:
Full stroke: 1.4mm
Plating Plunger: 0.4um Au over 1.4um Ni
Plating Body: 0.1um Au over 1.4um Ni.

100022-2

PART NUMBER

DIMENSIONS IN MM
TOLERANCES UNLESS
OTHER SPECIFIED
0 = ±-
0.0 = ±0.15
0.00 = ±0.10
0.000 = ±
ANGLE: ±1°
SURF TEXTURE: 3.2
REMOVE BURRS. BREAK
SHARP EDGES R0.05 MAX
DO NOT SCALE PRINT

MATL 1	HT TR —	FIN —	
DWN	APVD	top-Link Electronics	Top-Link Electronics Ltd.
CHK	REL		
NAME POGO CONNECTOR 2 POSITIONS PGC-1.5-6.5-R-2P-3.5PH			
SCALE 1:1	A4	DWG NO. C-100022	SHEET 1 OF 1	REV B

LTR	REVISION RECORD	APVD	DATE
	Update remark		2007/09/07

LOC –
DIST –

DWG NO. C-100022

THIS INFORMATION IS CONFIDENTIAL AND IS DISCLOSED TO YOU ON CONDITION THAT NO FURTHER DISCLOSURE IS MADE BY YOU TO OTHER THAN TOP-LINK PERSONNEL WITHOUT WRITTEN AUTHORIZATION FROM TOP-LINK LTD.

4 3 2 1