THIS INFORMATION IS CONFIDENTIAL AND IS DISCLOSED TO YOU ON CONDITION THAT NO FURTHER DISCLOSURE IS MADE BY YOU TO OTHER THAN TOP-LINK PERSONNEL WITHOUT WRITTEN AUTHORIZATION FROM TOP-LINK LTD.

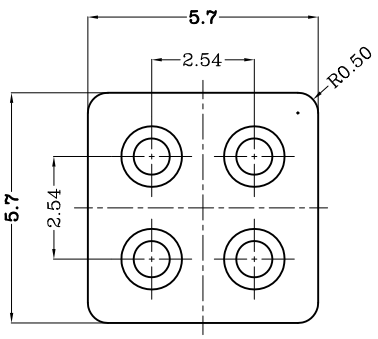

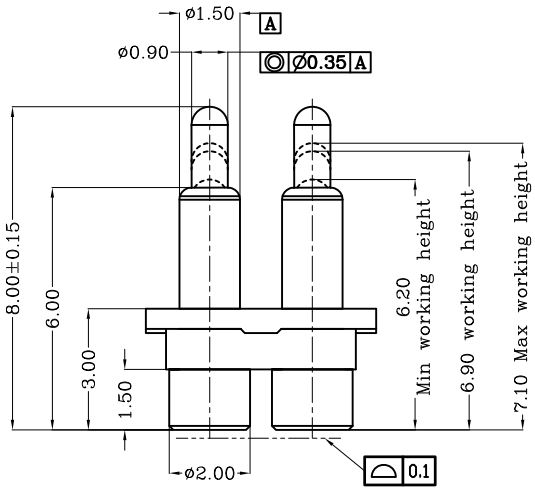

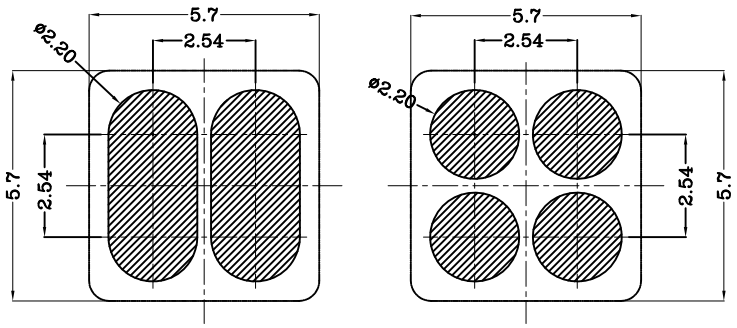

Recommended P.C.B. layout

Notes:
1 Dimensions shall be interpreted per ASME Y14.5M
2 Mechanical performance(See the table 1)
<2.1>The force is the average of forces obtained when plunger goes downwards and upwards
<2.2>Warning:Working height are not permitted to be less than Min working height
3 Electrical performance
<3.1>Current rating: 2.0A
<3.2>Voltage rating: 36VAC/DC
<3.3>Dynamic Resistance:30mOhm Max (between max and min working height)
<3.4>Insulation Resistance:100MOhm minimum
4 Environmental performance
<4.1> RoHS compliant
<4.2>Salt Spray: 48h Min
<4.3>Operating Temperature range:−40°C~+85°C
<4.4>Withstanding High Temperature:260°C/10Sec
5 Packaging:Carrier tape

TOP-LINK

Table 1:Mechanical performance		
Working Height	6.90mm	110±30gf
Durability	10000 Cycles Min.	

Item	Part Name	Q'TY	Material	Finish
4	Body	4pcs	Leaded Brass	Au 0.1um min plated over 1.4um min Ni
3	Plunger	4pcs	Leaded Brass	Au 0.4um min plated over 1.4um min Ni
2	Spring	4pcs	Stainless steel wire	--------
1	Housing	1pcs	High temp.Plastic; UL94 V−0 Color Black	--------

Item	Revision record	Date
B	Update	2017.09.20
A	New Release	2012.06.27

Top−Link Electronics Ltd.

TOLERANCES UNLESS OTHER SPECIFIED
0. = ± −
0.0 = ± 0.15
0.00 = ± 0.10
0.000= ± −
Angle: ±1°
SURF TEXTURE: REMOVE BURRS. BREAK SHARP EDGES R0.05 MAX.DO NOT SCALE PRINT.

Type: Customer drawing		Unit: mm	top-link
DRW: Caiwanlu	APRD:		
CHK:	REL:		
Name: Pogo Pin Connector			
Scale: 1:1	Size: A4	Part NO.: 100882−4	Page: 1/1	Rev: B