DWG NO. C-110349

USED ON –

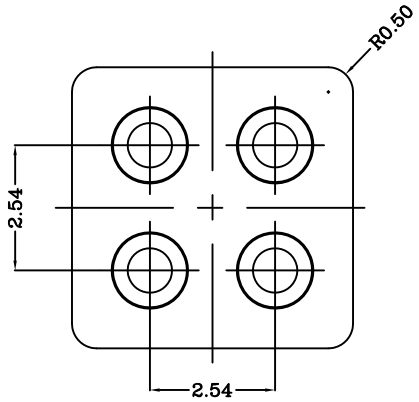

Notes:
1 Material, Housing: PA 4.6 (30% Glass Filled)
Color Black.
Contact: Brass
2 Mechanical demands:
Spring force: Min 0.3N with 0.5mm stroke
1.20 +0.30N/-0.20N with 1.0mm stroke.
Full stroke: 1.4mm
Plating Plunger: Min 0.4Um Au over 1.4um Ni
Plating Body: Min 0.1Um Au over 1.4um Ni.

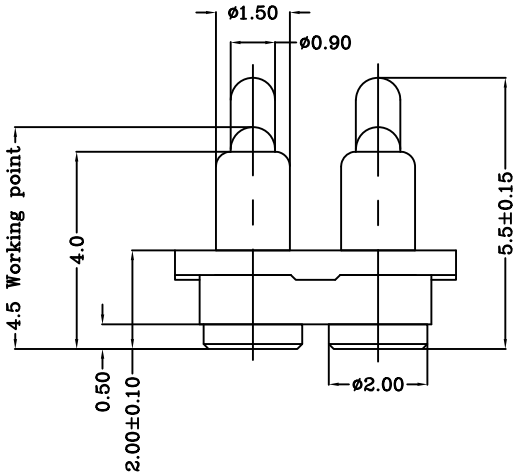

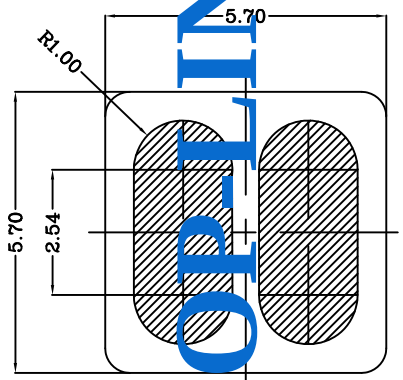

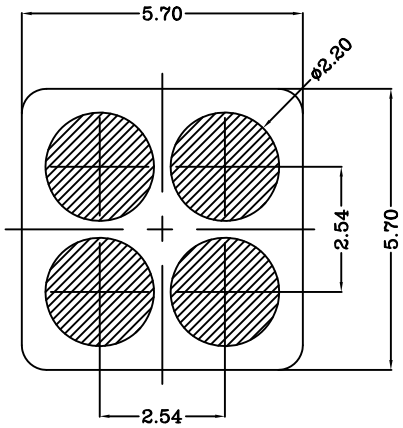

Recommended PCB Layout

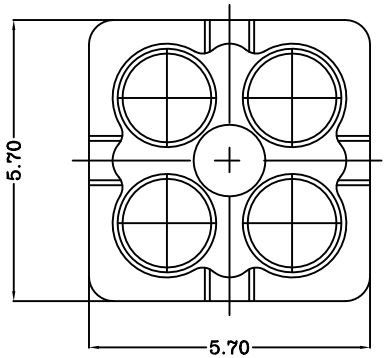

TOP-LINK

THIS INFORMATION IS CONFIDENTIAL AND IS DISCLOSED TO YOU ON CONDITION THAT NO FURTHER DISCLOSURE IS MADE BY YOU TO OTHER THAN TOP-LINK PERSONNEL WITHOUT WRITTEN AUTHORIZATION FROM TOP-LINK LTD.

LOC	–
DIST	–

LTR	REVISION RECORD	APVD	DATE
	NEW		08/06/17

DIMENSIONS IN MM
TOLERANCES UNLESS OTHER SPECIFIED
0 = ±-
0.0 = ±0.15
0.00 = ±0.10
0.000 = ±
ANGLE: ±1°
SURF TEXTURE: 3.2
REMOVE BURRS. BREAK SHARP EDGES R0.05 MAX
DO NOT SCALE PRINT

MATL 1	HT TR —	FIN —	
DWN Qin	APVD Lansing	Top-Link Electronics Ltd.	
CHK Jim	REL		
NAME BATTERY POGO CONNECTOR 4 POSITIONS PGC-1.5-5.5-2R-4P-2.54PH			
SCALE 1:1	A4	DWG NO. C-110349	SHEET 1 OF 1	REV A

110349-4

PART NUMBER

4 3 2 1

D C B A