USED ON
–

DWG NO.
C-101121

Notes:

1 Material:
1)Plunger & Body : CuZn36 Pb3, HO2 (C36000)
or CuZn39 PB3 or CuZn38 PB2 or CuZn36(C2700).
2)Spring : Stainless steel wire

2 Plating
1)Body: 0.1um Gold plating over min. 1.4um Nickle plating
2)Plunger: 0.4um Gold plating over min. 1.4um Nickle plating

3 Mechanical
1)Total stroke : 0.8mm
2)Durability: 10,000 cycle min.

4 Electrical
1)Contact resistance: 30mOhm Max.
2)Operating voltage: 36VDC

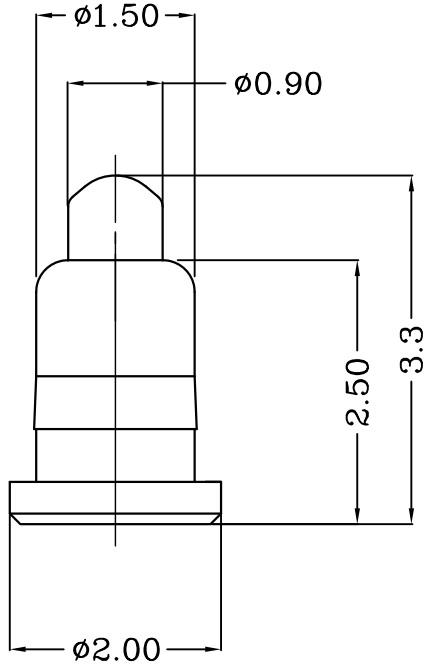

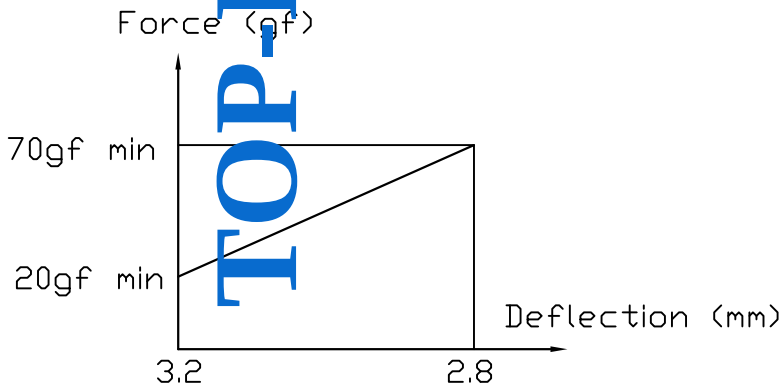

TOP-LINK

THIS INFORMATION IS CONFIDENTIAL AND IS DISCLOSED TO YOU ON CONDITION THAT NO FURTHER DISCLOSURE IS MADE BY YOU TO OTHER THAN TOP-LINK PERSONNEL WITHOUT WRITTEN AUTHORIZATION FROM TOP-LINK LTD.

LOC	-		
DIST	-		

LTR	REVISION RECORD	APVD	DATE
	NEW		2007/11/20

DIMENSIONS IN MM
TOLERANCES UNLESS OTHER SPECIFIED
0 = ±-
0.0 = ±0.15
0.00 = ±0.10
0.000 = ±
ANGLE: ±1°
SURF TEXTURE: 3.2
REMOVE BURRS. BREAK SHARP EDGES R0.05 MAX
DO NOT SCALE PRINT

MATL 1	HT TR —	FIN —	
DWN Benny	APVD Lansing	top-Link Electronics	Top-Link Electronics Ltd.
CHK Andy	REL		
NAME	POGO PIN Customer Drawing PG-2.0-0.4-1.5-2.5-3.3		
SCALE 1:1	A4	DWG NO. C-101121	SHEET 1 OF 1	REV A

101121-1
PART NUMBER

4 3 2 1