THIS INFORMATION IS CONFIDENTIAL AND IS DISCLOSED TO YOU ON CONDITION THAT NO FURTHER DISCLOSURE IS MADE BY YOU TO OTHER THAN TOP-LINK PERSONNEL WITHOUT WRITTEN AUTHORIZATION FROM TOP-LINK LTD.

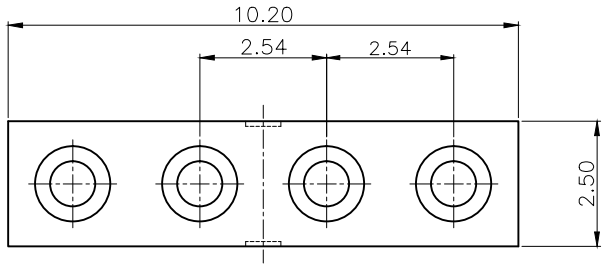

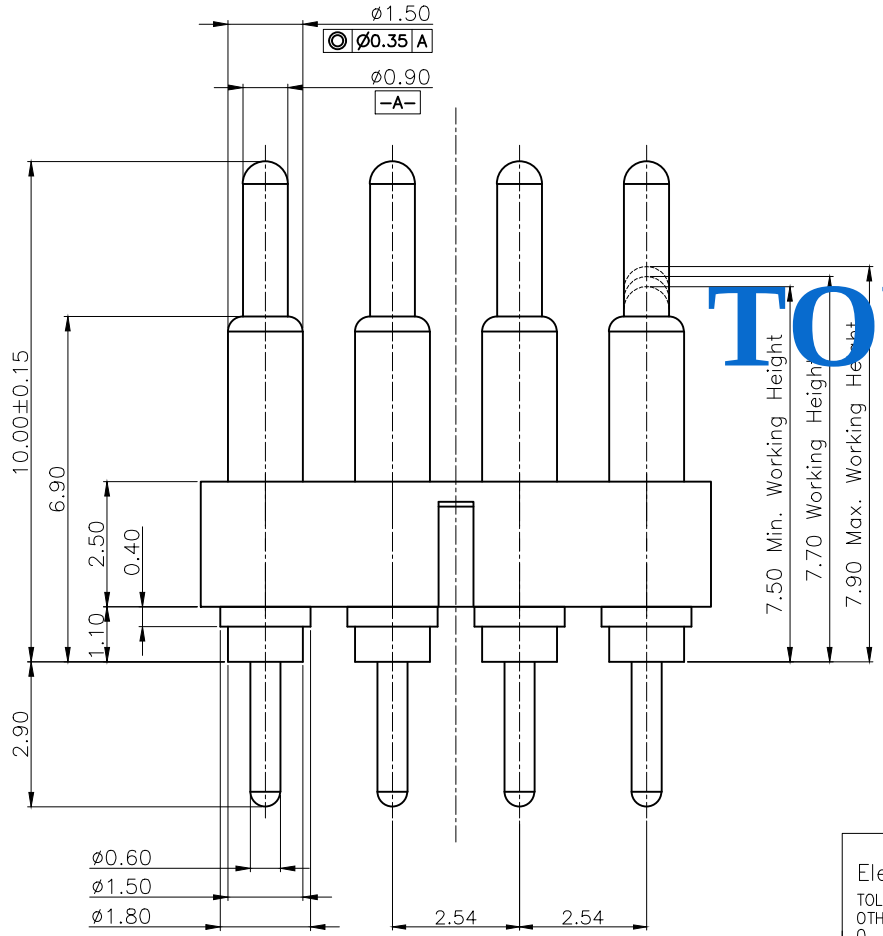

Notes:
1 Dimensions shall be interpreted per ASME Y14.5M
2 Mechanical performance(See the table 1)
<2.1>The force is the average of forces obtained when plunger goes downwards and upwards
<2.2>Warning:Working height are not permitted to be less than Min working height
3 Electrical performance
<3.1>Current rating: 2.0A
<3.2>Voltage rating: 36VAC/DC
<3.3>Dynamic Resistance: 30mOhm Max (between max and min working height)
<3.4>Insulation Resistance: 100MOhm minimum
4 Environmental performance
<4.1>RoHS compliant
<4.2>Salt Spray:48h Min
<4.3>Operating Temperature range: −40°C~+85°C
<4.4>Withstanding Hight Temperature: 260°C/10Sec
5 Packaging: Bag

TOP-LINK

Table 1:Mechanical performance

Working Height	7.70mm	110±20gf
Durability	10000 Cycles Min.	

Item	Part Name	Q'TY	Material	Finish
4	Body	1	Leaded Brass	Au plating 0.1um min Ni plating 1.4um min
3	Plunger	1	Leaded Brass	Au plating 0.4um min Ni plating 1.4um min
2	Spring	1	Stainless steel wire	--------
1	Housing	1	High temp.Plastic; UL94 V-0 Color Black	--------

Item	Revision record	Date
XA	New Release	2016.11.21

Top-Link Electronics Ltd.

TOLERANCES UNLESS OTHER SPECIFIED
0. = ± −
0.0 = ± 0.15
0.00 = ± 0.10
0.000= ± −
Angle: ±1°
SURF TEXTURE:
REMOVE BURRS.
BREAK SHARP EDGES R0.05 MAX.DO NOT SCALE PRINT.

Type: Customer drawing		Unit: mm	top-link
DWN: Wanki	APVD:		
CHK:	REL:		
NAME: Pogo PIN Connnector			
Scale: 1:1	Size: A4	Part NO.: 10110041814	Page: 1/1	Rev: XA